All Weather Slimline Lightweight Hook Clamp

Product Data Sheet

A high tensile extruded Slimline half coupler supplied with fixing kit.	
Part Nos	IP58086
Tube Diameter	Ø48 - 51mm (1.89" - 2.01")
Materials	Main Body - AW6082 T6 Aluminium Roll Pins - Stainless Steel Eyebolt Assy - Grade 316 Stainless Steel
Finish	Powder Painted Satin Black
Max Tightening Torque	30Nm
Fixings	A4 Grade Stainless Steel Supplied with M12 x 45 Bolt / Wing Nut
WLL	300Kg
Weight	0.32Kg (0.71 lbs)
Factor of Safety	5:1
Approval	TÜV Approved

Dimensions in mm

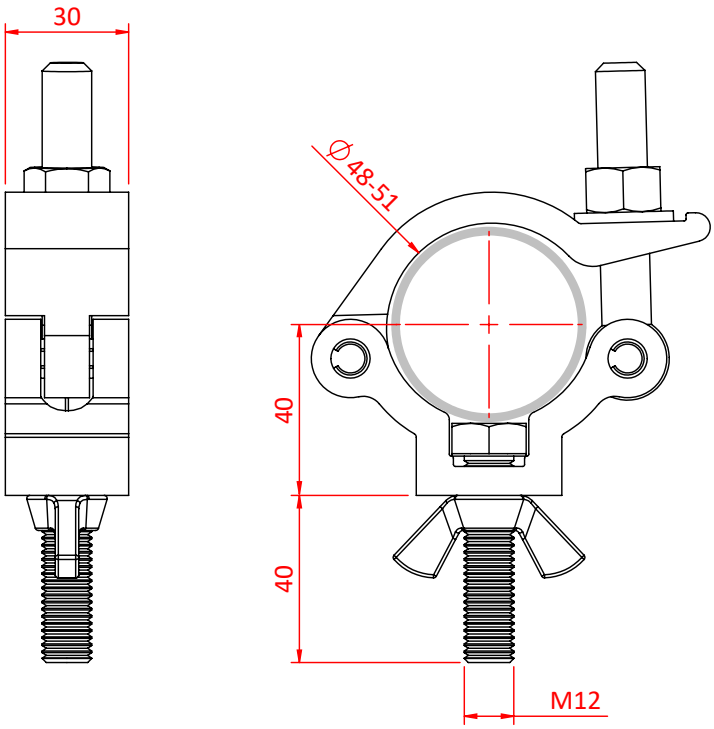

Doughty Engineering Ltd - Crow Arch Lane, Ringwood, Hampshire, BH24 1NZ, UK
+44 (0) 1425 478961, sales@doughty-engineering.co.uk - www.doughty-engineering.co.uk